© JERRY TURNER & ASSOCIATES, INC. THIS DOCUMENT IS THE PROPERTY OF JERRY TURNER & ASSOCIATES. ALL RIGHTS ARE RESERVED AND ANY POSSESSION, REPRODUCTION, OR OTHER USE OF THIS DOCUMENT WITHOUT THE PRIOR PERMISSION OF JERRY TURNER & ASSOCIATES IS EXPRESSLY PROHIBITED.

NOTES:
1. TRANSVERSE EXPANSION JOINT TO BE A MAX OF 50 FEET.
2. ALL CONCRETE TO BE FINISHED WITH CURING COMPOUND

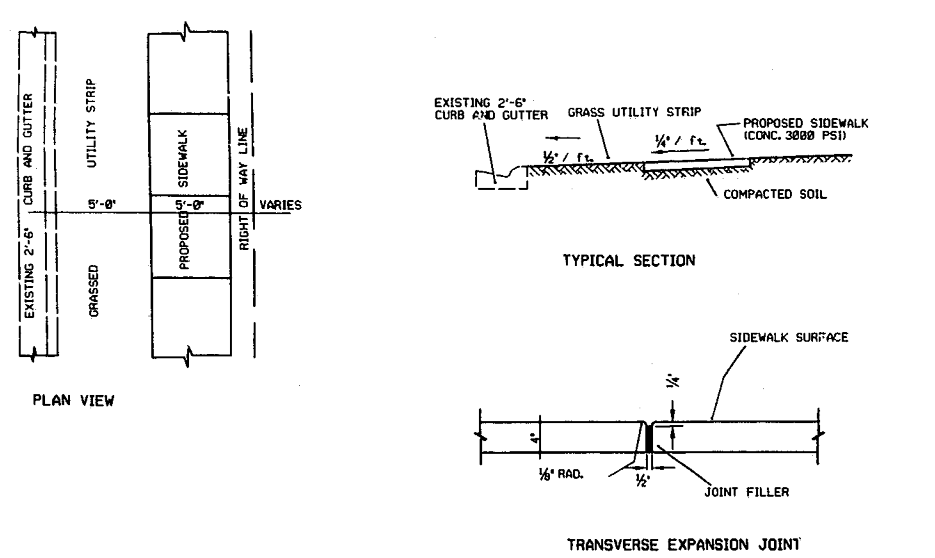

STANDARD CONCRETE SIDEWALK

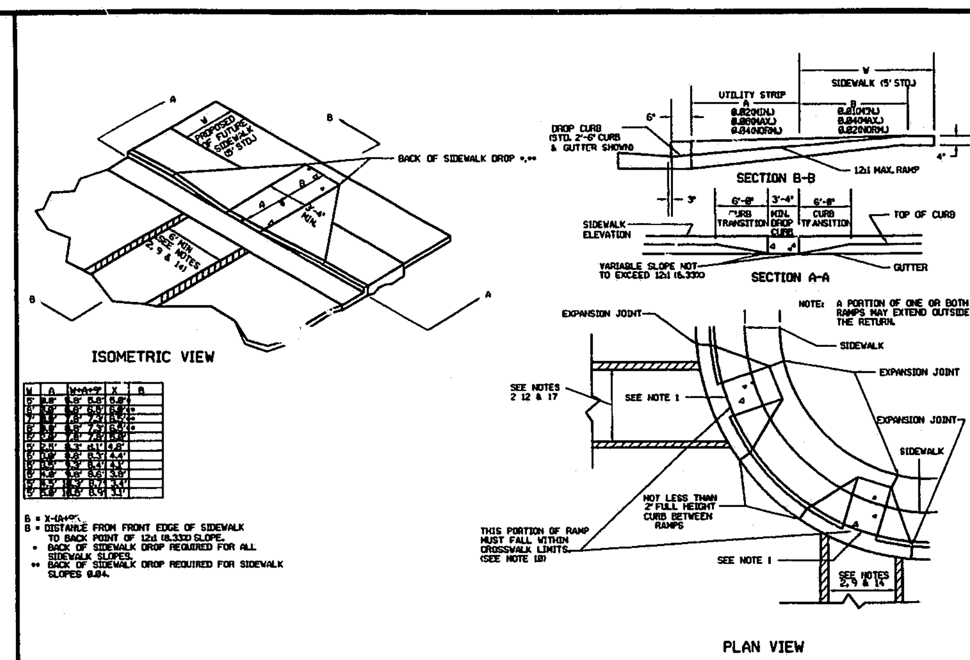

STANDARD WHEELCHAIR RAMP

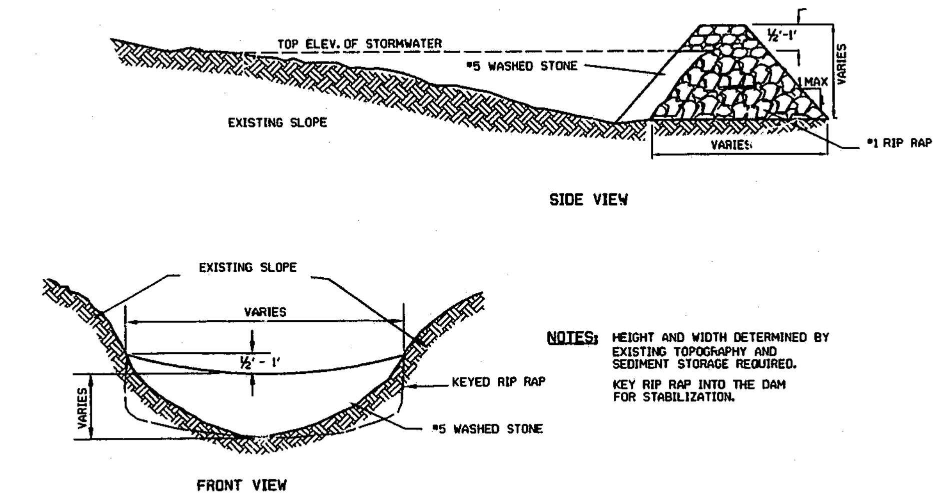

NOTES: HEIGHT AND WIDTH DETERMINED BY EXISTING TOPOGRAPHY AND SEDIMENT STORAGE REQUIRED.
KEY RIP RAP INTO THE DAM FOR STABILIZATION.

CHECK DAM

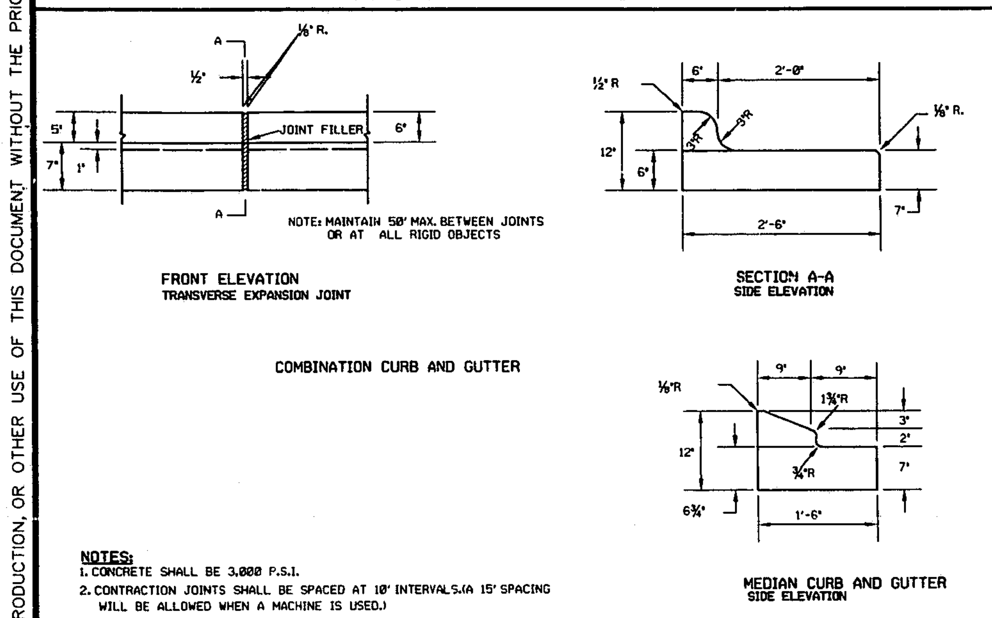

NOTES:
1. CONCRETE SHALL BE 3,000 P.S.I.
2. CONTRACTION JOINTS SHALL BE SPACED AT 10' INTERVALS.(A 15' SPACING WILL BE ALLOWED WHEN A MACHINE IS USED.)
3. FINISH ALL CONCRETE WITH CURING COMPOUND

STANDARD CONCRETE CURB AND GUTTER

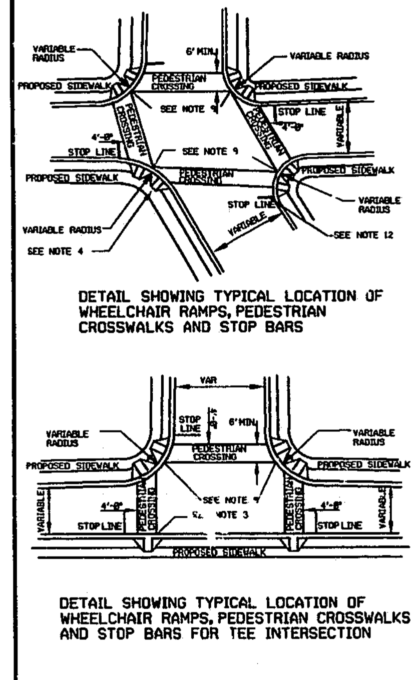

NOTES:
1. THE WALKING SURFACE SHALL BE 1:12 MIN SLOPE (8.33%)
2. CROSSWALK WIDTHS AND CONFIGURATION VARY: MUST CONFORM TO TRAFFIC DESIGN STANDARDS.
3. NORTH CAROLINA GENERAL STATUE 136-44 44 REQUIRES THAT ALL STREET CURBS BEING CONSTRUCTED OR RECONSTRUCTED FOR MAINTENANCE PROCEDURES, TRAFFIC OPERATIONS REPAIRS, CORRECTION OF UTILITIES OR ALTERED FOR ANY REASON AFTER SEPTEMBER 1 1973 SHALL PROVIDE WHEEL CHAIR RAMPS FOR THE PHYSICALLY HANDICAPPED AT ALL INTERSECTIONS WHERE BOTH CURB AND GUTTER AND SIDEWALKS ARE PROVIDED AND AT OTHER POINTS OF PEDESTRIAN FLOW.
IN ADDITION SECTION 228 OF THE 1973 FEDERAL AID HIGHWAY SAFETY ACT REQUIRES PROVISION OF CURB RAMPS ON ANY CURB CONSTRUCTION AFTER JULY 1 1976 WHETHER A SIDEWALK IS PROPOSED INITIALLY OR IS PLANNED FOR FUTURE DATE
THE AMERICANS WITH DISABILITY ACT (ADA) OF 1990 EXTENDS TO INDIVIDUALS WITH DISABILITIES, COMPREHENSIVE CIVIL RIGHTS PROTECTIONS SIMILAR TO THOSE PROVIDED TO PERSONS ON THE BASIS OF RACE, SEX, NATIONAL ORIGIN AND RELIGION UNDER THE CIVIL RIGHTS ACT OF 1964. THESE CURB RAMPS HAVE BEEN DESIGNED TO COMPLY WITH TITLE III OF THE ADA, BECOMING EFFECTIVE ON JANUARY 26, 1992.
4. WHEELCHAIR RAMPS SHALL BE PROVIDED AT LOCATIONS AS SHOWN ON THE PLANS OR AS DIRECTED BY THE ENGINEER. WHEELCHAIR RAMPS SHALL BE LOCATED AS INDICATED IN THESE DETAILS. HOWEVER THE LOCATION MAY BE ADJUSTED BY THE ENGINEER WHERE EXISTING LIGHT POLES, FIRE HYDRANTS, DROP INLETS ETC. AFFECT PLACEMENT. AT ALL LOCATIONS, NOT LESS THAN 2 FEET OF FULL HEIGHT CURB SHALL BE PLACED BETWEEN THE RAMPS.
5. NO SLOPE ON THE WHEELCHAIR RAMP SHALL EXCEED 1"/1' (12:1) IN RELATIONSHIP TO THE GRADE OF THE STREET.
6. IN NO CASE SHALL THE WIDTH OF THE WHEELCHAIR RAMP BE LESS THAN 40" (3'-4"). HOWEVER WIDTH MAY EXCEED 40"
7. USE CLASS "B" CONCRETE WITH A SIDEWALK FINISH IN ORDER TO OBTAIN A ROUGH NON-SKID TYPE SURFACE. (SEE DETAIL 317A)
8. A½" EXPANSION JOINT WILL BE REQUIRED WHERE THE CONCRETE WHEELCHAIR RAMP JOINS THE CURB.
9. THE INSIDE PEDESTRIAN CROSSWALK LINES SHALL BE SET NO CLOSER IN THE INTERSECTION THAN WOULD BE ESTABLISHED BY BISECTING THE INTERSECTION RADII. (SEE NOTE 14)
10. THE CURB CUT AND THE PEDESTRIAN CROSSWALK LINES SHALL BE COORDINATED SO THAT THE BEGINNING OF THE WHEELCHAIR RAMP WILL FALL WITHIN THE PEDESTRIAN CROSSWALK LINES.
11. THE MINIMUM WIDTH OF THE PEDESTRIAN CROSSWALK SHALL BE 6 FEET. A CROSSWALK WIDTH OF 10' OR GREATER IS DESIRABLE.
12. STOP LINES, NORMALLY PERPENDICULAR TO THE LANE LINES, SHALL BE USED WHERE IT IS IMPORTANT TO INDICATE THE POINT BEHIND WHICH VEHICLES ARE REQUIRED TO STOP IN COMPLIANCE WITH A TRAFFIC SIGNAL STOP SIGN OR OTHER LEGAL REQUIREMENT. AN UNUSUAL APPROACH SKEW MAY REQUIRE THE PLACEMENT OF THE STOP LINE TO BE PARALLEL TO THE INTERSECTING ROADWAY.
13. PARKING SHALL BE ELIMINATED A MINIMUM OF 20 FEET BACK OF PEDESTRIAN CROSSWALK.
14. ALL PAVEMENT MARKINGS SHALL BE IN ACCORDANCE WITH THE LATEST EDITION OF THE MANUAL OF UNIFORM TRAFFIC CONTROL DEVICES (MUTCD) PUBLISHED BY THE FEDERAL HIGHWAY ADMINISTRATION AND THE NORTH CAROLINA SUPPLEMENT TO THE MUTCD.

STANDARD WHEELCHAIR RAMP

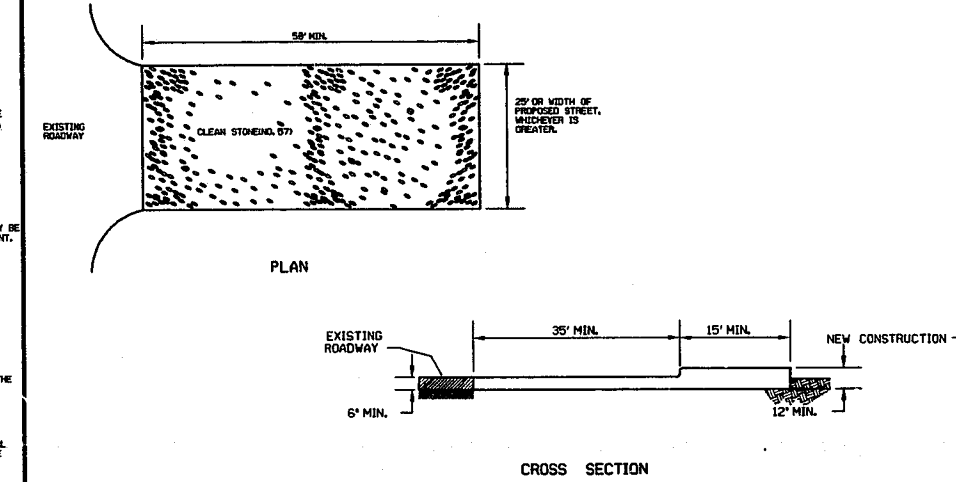

CONSTRUCTION ENTRANCE

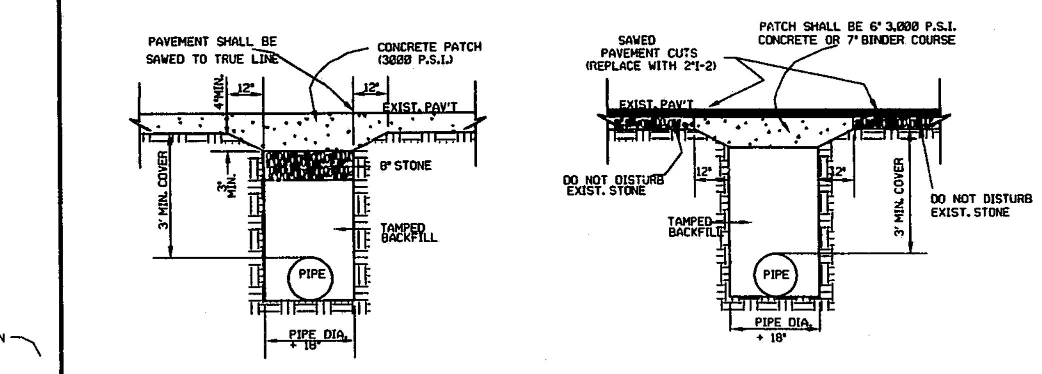

NOTE TO CONTRACTOR:
ALL PAVEMENT CUTS SHALL BE REPAIRED WITHIN A MAXIMUM OF THREE (3) DAYS FROM THE DATE THE CUT IS MADE. IF CONDITIONS DO NOT PERMIT A PERMANENT REPAIR WITHIN THE GIVEN TIME LIMIT, PERMISSION TO MAKE A TEMPORARY REPAIR MUST BE OBTAINED FROM THE DIRECTOR OF CONSTRUCTION MANAGEMENT.

CONCRETE TRENCH CAP ON ASPHALT STREETS SHALL BE USED ONLY DURING INCLEMENT WEATHER WHEN ASPHALT PLANTS ARE NOT OPERATING.

STANDARD TRENCH AND PAVEMENT REPAIR SECTIONS

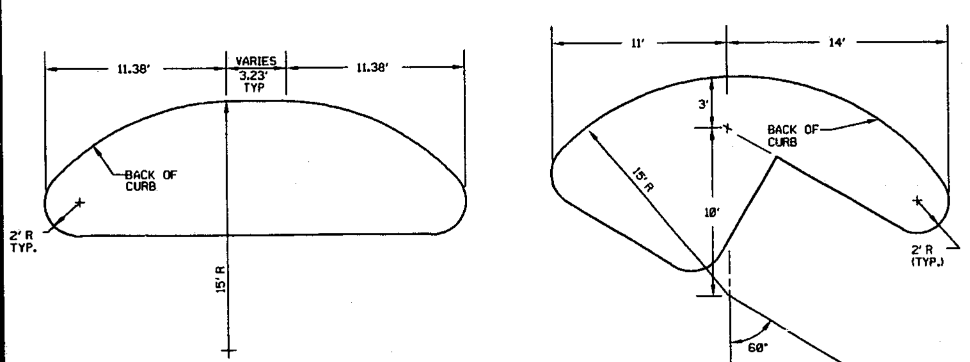

END ISLANDS FOR PARKING LOTS

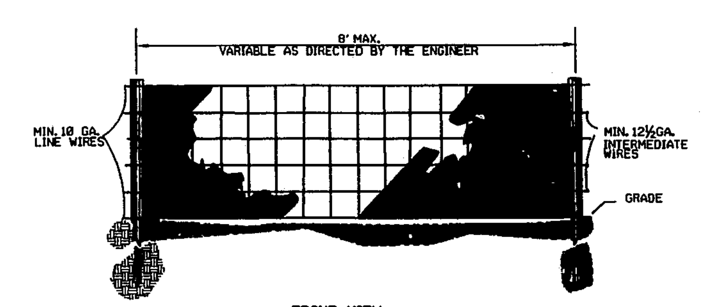

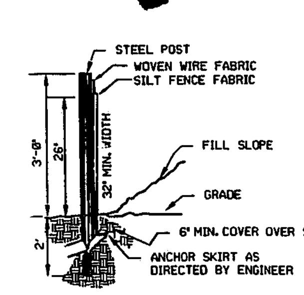

NOTES:
- USE SILT FENCE ONLY WHEN DRAINAGE AREA DOES NOT EXCEED ¼ ACRE AND NEVER IN AREAS OF CONCENTRATED FLOW

FOR REPAIR OF SILT FENCE FAILURES, USE NO. 57 WASHED STONE

STANDARD TEMPORARY SILT FENCE

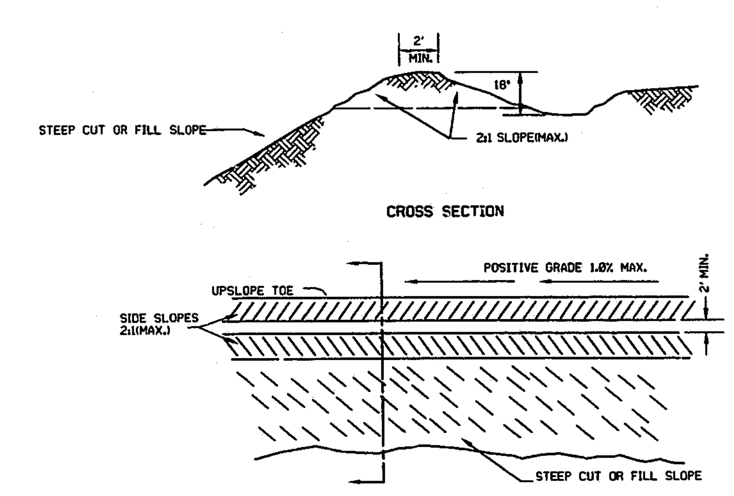

DIVERSION DITCH

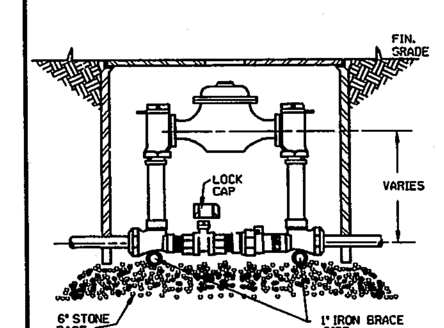

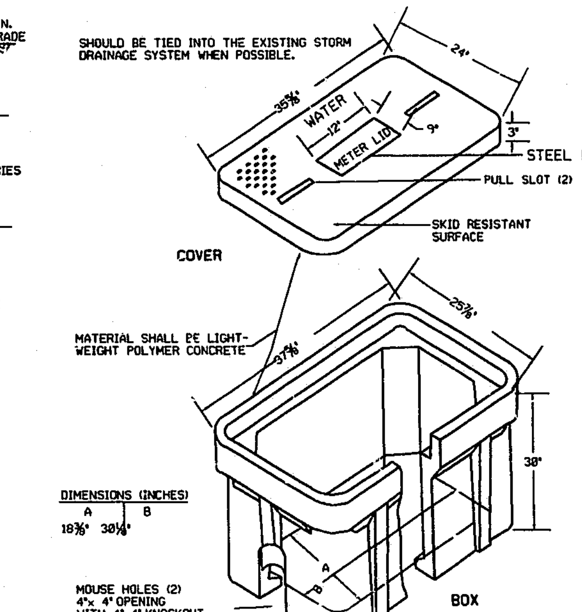

NOTES:
PIPING TO BE BRASS & COPPER TUBING & SHALL BE EQUIPPED W/ANGLED CHECK VALVE OUTLETS & BY-PASS FLANGED VALVE OR BY-PASS FLANGED BALL VALVE INLETS AS FURNISHED BY FORD CUSTOMSETTERS, MUELLER OR OTHER APPROVED EQUAL.

PRECAST CONCRETE BOX WITH ALUMINUM ACCESS HATCH WILL BE AN ACCEPTABLE ALTERNATIVE WITH APPROVAL OF THE TOWN ENGINEER

STANDARD 1½" & 2" METER INSTALLATION AND VAULT

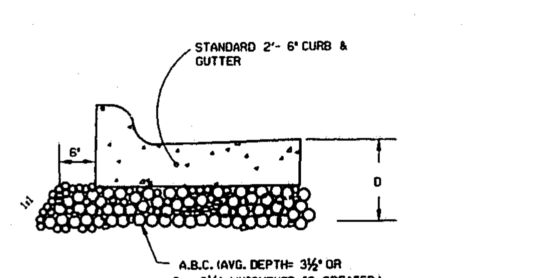

A.B.C. UNDER 2'-6" CURB & GUTTER

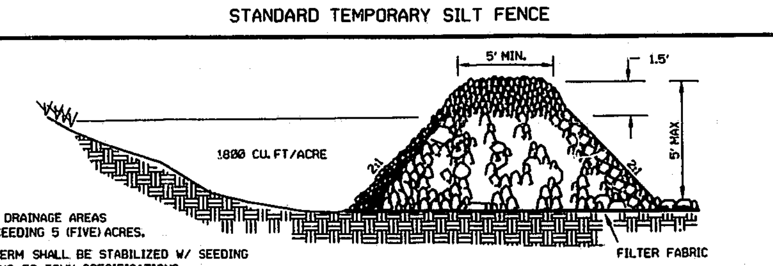

NOTES:
1. USE FOR DRAINAGE AREAS NOT EXCEEDING 5 (FIVE) ACRES.
2. EARTH BERM SHALL BE STABILIZED W/ SEEDING ACCORDING TO TOWN SPECIFICATIONS.

DESIGN OF SPILLWAYS

DRAINAGE AREA (ACRES)	WEIR LENGTH[1] (FT.)
1	4.0
2	6.0
3	8.0
4	10.0
5	12.0

[1] DIMENSIONS SHOWN ARE MINIMUM

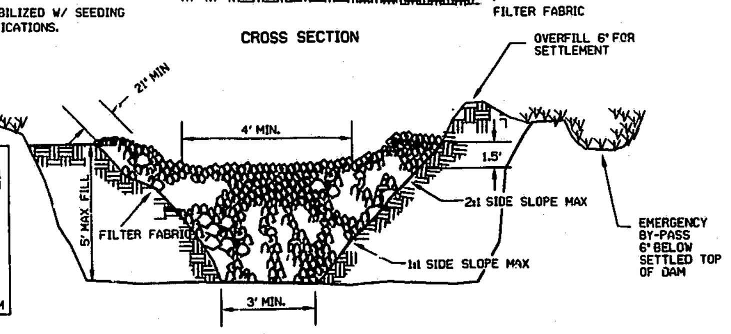

MAINTENANCE
INSPECT TEMPORARY SEDIMENT TRAPS AFTER EACH PERIOD OF SIGNIFICANT RAINFALL. REMOVE SEDIMENT AND RESTORE TRAP TO ITS ORIGINAL DIMENSIONS WHEN THE SEDIMENT HAS ACCUMULATED TO ONE-HALF THE DESIGN DEPTH OF THE TRAP. PLACE THE SEDIMENT THAT IS REMOVED IN A DESIGNATED DISPOSAL AREA AND REPLACE THE CONTAMINATED PART OF THE GRAVEL FACING.

CHECK THE STRUCTURE FOR DAMAGE FROM EROSION OR PIPING. PERIODICALLY CHECK THE DEPTH OF THE SPILLWAY TO ENSURE IT IS A MINIMUM OF 1.5 FT. BELOW THE LOW POINT OF THE EMBANKMENT. IMMEDIATELY FILL ANY SETTLEMENT OF THE EMBANKMENT TO SLIGHTLY ABOVE DESIGN GRADE. ANY RIP RAP DISPLACED FROM THE SPILLWAY MUST BE REPLACED IMMEDIATELY.

STABILIZE THE EMBANKMENT AND ALL DISTURBED AREAS ABOVE THE SEDIMENT POOL AND DOWNSTREAM FROM THE TRAP IMMEDIATELY AFTER CONSTRUCTION WITH SEEDING.

GRAVEL AND RIP RAP FILTER BASIN

CONSTRUCTION SPECIFICATIONS
1. LAY ONE BLOCK ON EACH SIDE OF THE STRUCTURE ON ITS SIDE ON THE BOTTOM ROW TO ALLOW POOL DRAINAGE. THE FOUNDATION SHOULD BE EXCAVATED AT LEAST 2 INCH BELOW THE CREST OF THE STORM DRAIN. PLACE THE BOTTOM ROW OF THE BLOCK AGAINST THE EDGE OF THE STORM DRAIN FOR LATERAL SUPPORT AND TO AVOID WASHOUTS WHEN OVERFLOW OCCURS. IF NEEDED, GIVE LATERAL SUPPORT TO SUBSEQUENT ROWS BY PLACING 2x4 WOOD STUDS THROUGH BLOCK OPENINGS.
2. CAREFULLY FIT HARDWARE CLOTH OR COMPARABLE WIRE MESH WITH 1/2-INCH OPENING OVER ALL BLOCK OPENING TO HOLD GRAVEL IN PLACE.
3. USE CLEAN GRAVEL, 3/4-TO 1/2-INCH IN DIAMETER, PLACED 2 INCHES BELOW THE TOP OF THE BLOCK ON A 2:1 SLOPE OR FLATTER AND SMOOTH IT TO AN EVEN GRADE. DOT #57 WASHED STONE IS RECOMMENDED.

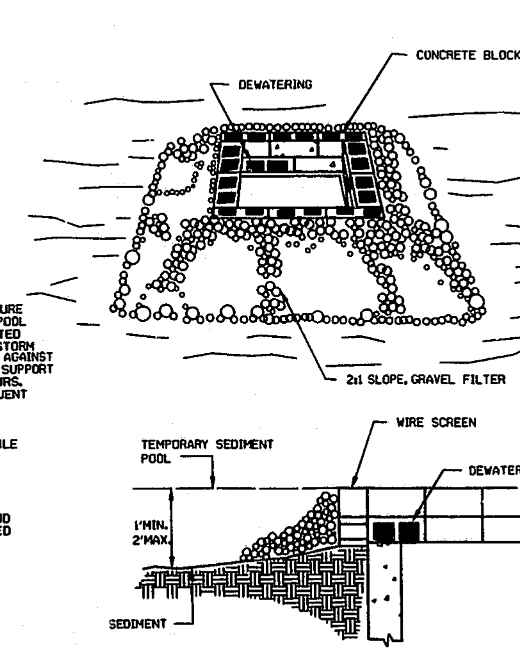

BLOCK AND GRAVEL DROP INLET PROTECTION

NOTES:
METER AND BY-PASS ASSEMBLY TO BE DUCTILE IRON FLANGED PIPE
METER FACE TO BE A MAXIMUM OF 2' BELOW FINISHED GRADE
ADJUSTABLE CONNECTING PIECE TO BE CLOW F-1439 ADJUSTABLE CONNECTOR
ACCESS DOOR TO BE ALUMINUM AS MANUFACTURED BY BILCO, OF 42" X 36"
EITHER SOLID BRICK, SOLID BLOCK OR PRECAST CONCRETE MAY BE USED.
TO ENSURE POSITIVE DRAINAGE, THE VAULT SHOULD BE TIED INTO THE EXISTING STORM DRAINAGE SYSTEM WHEN POSSIBLE

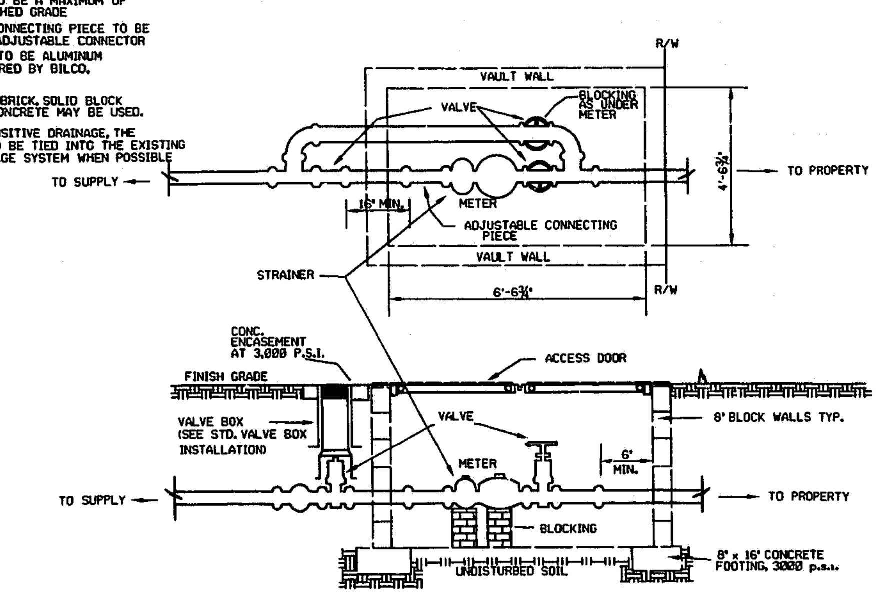

STANDARD 3" AND 4" METER INSTALLATION AND VAULT

R:/95318/SP-11.DGN

JERRY TURNER & ASSOCIATES
LANDSCAPE ARCHITECTURE
LAND PLANNING
ENVIRONMENTAL DESIGN

905 JONES FRANKLIN ROAD
RALEIGH, NORTH CAROLINA 27606
(919) 851-7150

62 S.E. 6TH AVENUE
DELRAY BEACH, FLORIDA 33483
(407) 276-0453

PROJECT
PRESTONWOOD COUNTRY CLUB EXPANSION
PHASE I
(SWIM COMPLEX)

OWNER:
PRESTONWOOD COUNTRY CLUB, INC.
CARY, NORTH CAROLINA

REVISIONS

BASS, NIXON, & KENNEDY, INC.
CONSULTING ENGINEERS
7416 CHAPEL HILL ROAD
RALEIGH, NC 27607
919 851-4422

DRAWN	CHECKED
BGB/AEB	DCK
SCALE	DATE
1" = 40'	10-27-95

TITLE
SITE DETAILS

FILE NO. JOB NO.

SEAL SHEET NO.
NORTH CAROLINA PROFESSIONAL ENGINEER SEAL 4504 DON C. KENNEDY

SP-11