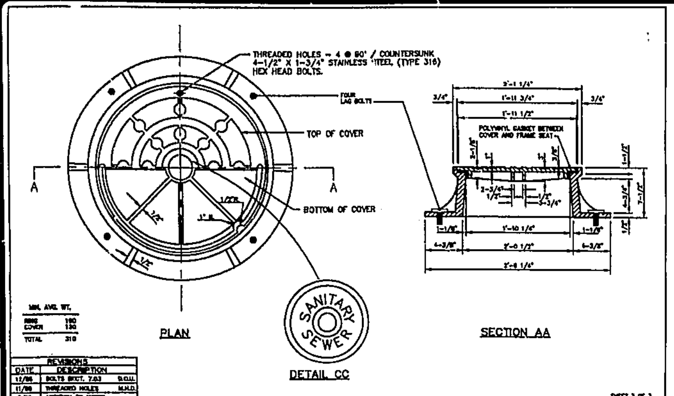

STANDARD MANHOLE RING AND COVER (TYPE 3 FOR WATERTIGHT MANHOLES) — STD. No. 7.03

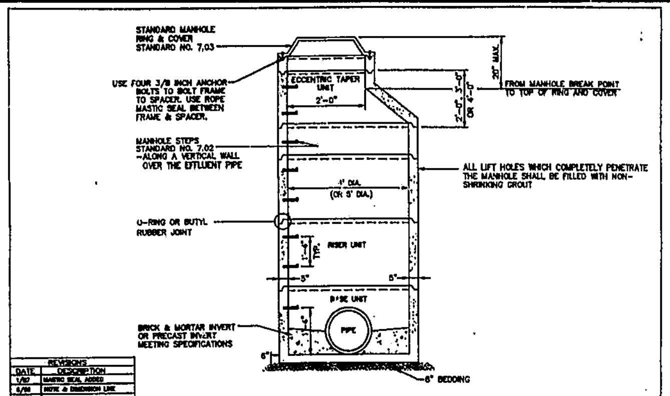

STANDARD PRECAST CONCRETE MANHOLE — STD. No. 7.01

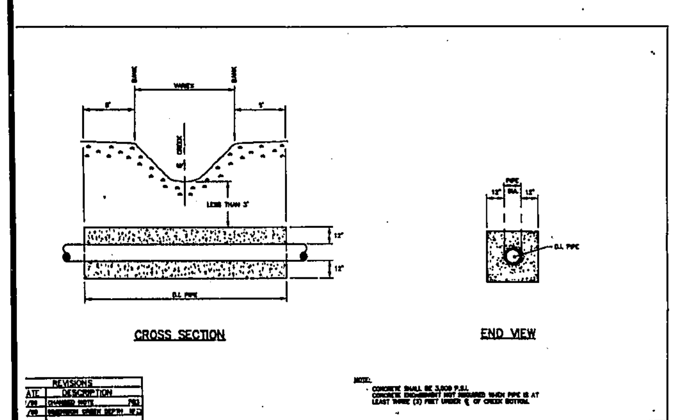

STANDARD CONCRETE ENCASEMENT FOR STREAM CROSSING — STD. No. 7.14

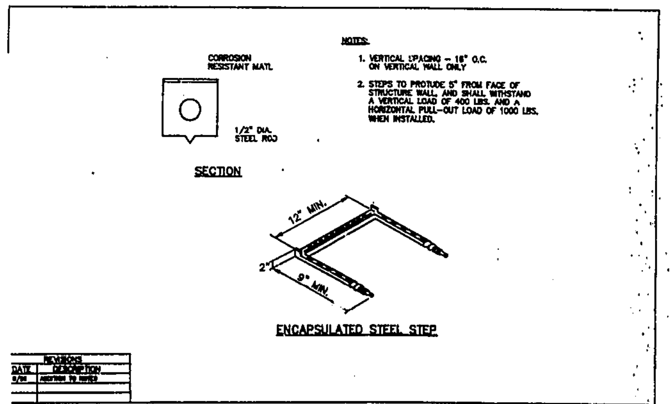

MANHOLE STEPS — STD. No. 7.02

9-460-4935 DEVELOPMENT SERVICES PAGE 01

MINIMUM LOT LANDSCAPE

1. EXISTING VEGETATION WILL BE RETAINED WHENEVER POSSIBLE.
2. AFTER DWELLING CONSTRUCTION, EACH LOT SHALL HAVE AS MINIMUM THE FOLLOWING PLANT TYPES AND NUMBERS:
   a) 1 SHADE TREE – 40' TO 60' HEIGHT AT MATURITY (2" CALIPER, 8' HIGH AT PLANTING – DECIDUOUS/EVERGREEN)
   b) 1 UNDERSTORY TREE – 15' TO 40' HEIGHT AT MATURITY (6'-8' HEIGHT AT PLANTING)
   c) 4 SHRUBS – 5' TO 8' HEIGHT AT MATURITY (3 GALLON AT PLANTING)
   d) 8 SHRUBS – 2' TO 4' HEIGHT AT MATURITY (3 GALLON AT PLANTING)
3. EXISTING VEGETATION THAT REMAINS ON THE LOT SHALL BE INCLUDED IN THE COUNT OF MINIMUM LOT LANDSCAPING.
4. NO LESS THAN 50 PERCENT OF THE MINIMUM LANDSCAPING SHALL BE VISIBLE FROM THE FRONT OF THE LOT.
5. STREET TREES SHALL NOT BE INCLUDED IN THE COUNT FOR MINIMUM LOT LANDSCAPE.

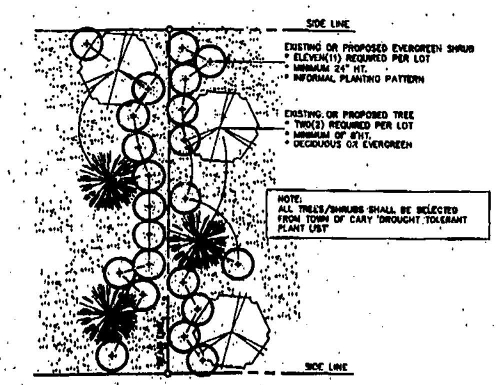

TYPICAL REAR YARD TO REAR YARD SCREENING PLAN
NTS

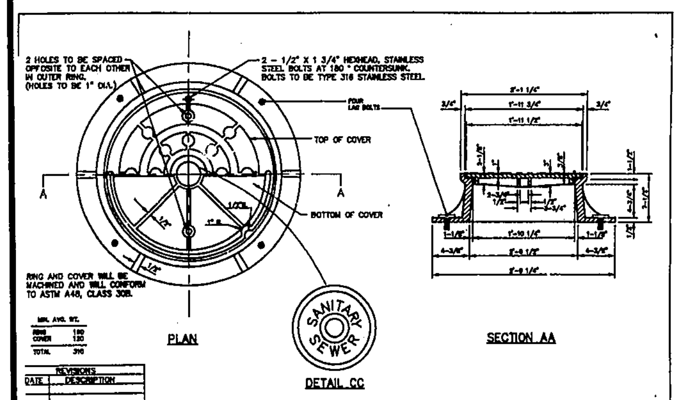

STANDARD MANHOLE RING AND COVER (TYPE 2 FOR OUTFALLS) — STD. No. 7.03

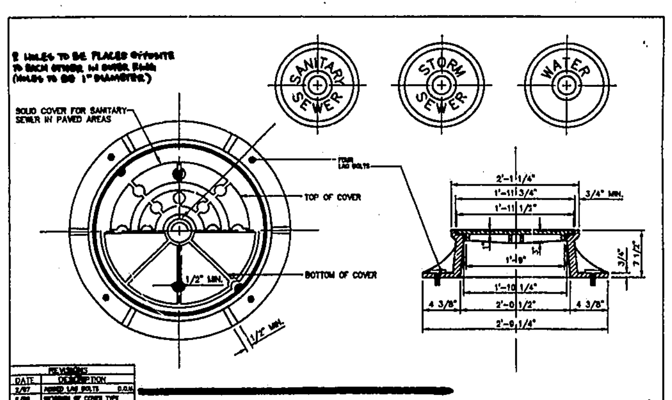

STANDARD MANHOLE RING AND COVER (TYPE 1 PAVED AREAS) — STD. No. 7.03

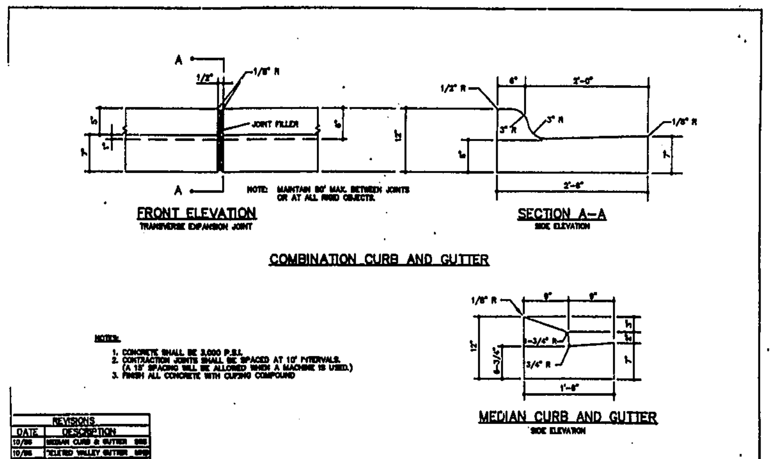

STANDARD CONCRETE CURB AND GUTTER — STD. No. 3.03

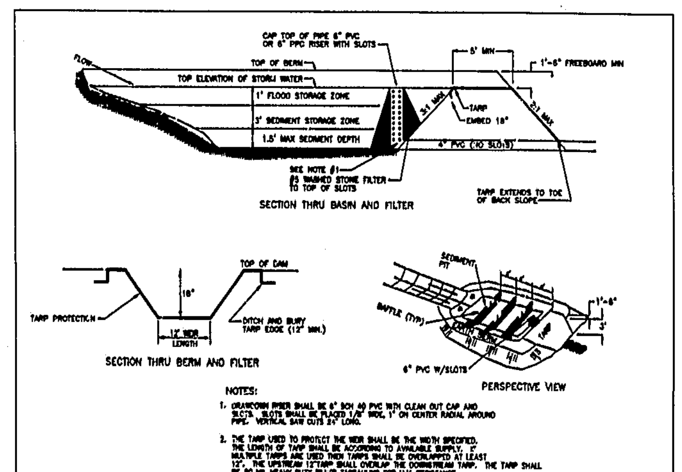

NOTES:
1. DRAWDOWN RISER SHALL BE 6" SCH 40 PVC WITH CLEAN OUT CAP AND SLOTS. SLOTS SHALL BE PLACED 1/8" WIDE, 1" ON CENTER RADIAL AROUND PIPE. VERTICAL SAW CUTS 24" LONG.
2. THE TARP USED TO PROTECT THE WEIR SHALL BE THE WIDTH SPECIFIED. THE LENGTH OF TARP SHALL BE ACCORDING TO AVAILABLE SUPPLY. IF MULTIPLE TARPS ARE USED THEN TARPS SHALL BE OVERLAPPED AT LEAST 12". THE UPSTREAM 12"TARP SHALL OVERLAP THE DOWNSTREAM TARP. THE TARP SHALL BE 80 MIL HEAVY DUTY SILVER TARPAULINS FOR U.V. RESISTANCE.

CUSTOM BASIN

CHANNEL FLOW SHEAR STRESS CALCULATIONS

Project: Optimist Farm Road
Date: 11-8-00
Project # 136-00
Revisions:

Rational Method
Q=CIA
Q = Stormwater Runoff (cfs)
C = Runoff Coefficient
I = Rainfall Intensity (in.)
D.A = Drainage Area

Rainfall intensity (I) = g/(h+T)
T = Time of concentration (use 5 minutes)

	Storm Event	g	h	Intensity (I) for T=5min.
Q_{10} = Ten year storm runoff	10	196	22	7.19

Rainfall intensity from "Elements of Urban Stormwater Design", by H. Rooney Malcom, P.E. at North Carolina State University

Shear Stress = unit weight of water(62.4 #/Ft³) * channel depth (Ft) * channel slope (Ft/Ft)

Channel No.	D.A. (acre)	C	Intensity I	Q_{10} (CFS)	Velocity (Ft/Sec)	Channel Depth (Ft)	Channel Slope (Ft/Ft)	Shear Stress (#/Ft²)	Recommended Channel Lining
A1	15.93	0.34	7.19	88.1	3.86	1.77	0.0330	3.64	Class "1" Rip Rap D_{50}=13" Depth 24 inches
A2	6.88	0.35	7.19	16.4	4.38	0.83	0.01000	0.52	Class "B" Rip Rap D_{50}=6" 18" Depth
A3	15.00	0.35	7.19	37.7	3.78	1.52	0.03000	3.00	Class "1" Rip Rap D_{50}=13" Depth 24 inches
A4	16.00	0.35	7.19	42.5	4.72	1.43	0.06300	5.62	Class "1" Rip Rap D_{50}=13" Depth 24 inches
A5	16.00	0.36	7.19	41.8	6.13	1.25	0.10000	7.80	Class "2" Rip Rap D_{50}=23" 36" Depth
A6	70.00	0.35	7.19	177.4	5.5	2.93	0.03030	6.95	Class "2" Rip Rap D_{50}=23" 36" Depth
B	67.00	0.3	7.19	144.5	9.19	2.24	0.02700	3.77	Class "1" Rip Rap D_{50}=13" Depth 24 inches
C	4.00	0.4	7.19	11.5	6.18	0.86	0.05290	2.84	Class "1" Rip Rap D_{50}=13" Depth 24 inches
C1	4.00	0.4	7.19	11.5	5.03	0.96	0.03000	1.83	Class "B" Rip Rap D_{50}=6" 18" Depth
C2	4.00	0.4	7.19	11.5	2.93	1.25	0.00720	0.56	* Straw blanket with netting (TYPE 1)
D	0.30	0.65	7.19	0.9	1.95	0.43	0.01330	0.36	* Straw blanket with netting (TYPE 1)
E	2.00	0.4	7.19	5.8	3.1	0.86	0.01330	0.71	* Straw blanket with netting (TYPE 1)
F	4.00	0.4	7.19	11.5	5.96	0.80	0.04010	2.04	Class "1" Rip Rap D_{50}=13" Depth 24 inches
G	0.36	0.65	7.19	1.6	3.04	0.42	0.04010	1.26	* Straw blanket with netting (TYPE 1)
H	0.17	0.65	7.19	0.5	2.22	0.30	0.02040	0.40	* Straw blanket with netting (TYPE 1)
I	4.90	0.35	7.19	12.3	4.4	1.00	0.02040	1.36	Class "B" Rip Rap D_{50}=6" 18" Depth
J	1.30	0.3	7.19	2.8	3.17	0.60	0.02200	0.84	* Straw blanket with netting (TYPE 1)
K	0.17	0.65	7.19	0.8	2.32	0.37	0.02200	0.63	* Straw blanket with netting (TYPE 1)
L	1.55	0.35	7.19	3.9	4.02	0.67	0.06020	2.80	Class "B" Rip Rap D_{50}=6" 18" Depth
M	0.26	0.65	7.19	1.2	3.00	0.37	0.06020	1.30	* Straw blanket with netting (TYPE 1)
N	2.00	0.35	7.19	5.0	4.02	0.71	0.02020	1.29	Class "B" Rip Rap D_{50}=6" 18" Depth
O	0.15	0.65	7.19	0.7	2.45	0.34	0.02020	0.62	* Straw blanket with netting (TYPE 1)
P	1.4	0.35	7.19	3.5	4.22	0.80	0.04230	1.83	Class "B" Rip Rap D_{50}=6" 18" Depth
R	0.17	0.65	7.19	0.8	2.92	0.33	0.04230	0.87	* Straw blanket with netting (TYPE 1)
S	4.8	0.35	7.19	12.1	5.20	0.86	0.03070	1.60	Class "B" Rip Rap D_{50}=6" 18" Depth
T	0.4	0.65	7.19	1.9	1.92	0.54	0.03070	1.63	* Straw blanket with netting (TYPE 1)
U	2.5	0.35	7.19	6.3	3.10	0.63	0.03030	1.95	* Straw blanket with netting (TYPE 3)
V	0.2	0.65	7.19	0.9	1.97	0.30	0.06000	1.22	* Straw blanket with netting (TYPE 1)
W	4.8	0.35	7.19	12.1	4.90	0.91	0.03030	1.40	Class "B" Rip Rap D_{50}=6" 18" Depth
X	0.2	0.65	7.19	0.9	4.90	0.90	0.03030	1.31	Class "B" Rip Rap D_{50}=6" 18" Depth
Y	4.8	0.35	7.19	12.1	3.27	1.11	0.06000	0.62	* Straw blanket with netting (TYPE 1)
Z	0.3	0.65	7.19	1.4	1.83	0.48	0.06000	0.27	* Straw blanket with netting (TYPE 1)
Z1	15	0.35	7.19	37.7	7.95	1.73	0.06000	4.16	Class "1" Rip Rap D_{50}=13" Depth 24 inches
Z2	17	0.65	7.19	78.4	8.14	1.42	0.05000	4.43	Class "1" Rip Rap D_{50}=13" Depth 24 inches
Z3	0.2	0.65	7.19	0.9	1.19	0.34	0.05000	1.06	* Straw blanket with netting (TYPE 1)

* use North American Green produce (or approved equal)
TYPE 1 = S75/S75BN
TYPE 2 = S150/S150BN
TYPE 3 = P300

OUTLET PROTECTION RIP RAP APRONS

PROJECT: 309-01
DATE: 2/4/02

STORM SEWER STRUCTURE No.	APRON SIZE (Length, Width, Thickness)	RIP RAP TYPE
PREVIOUSLY APPROVED CONSTRUCTION DRAWINGS		
1	9' X 6' X 18 INCHES	Class "B" Stone D_{50}=6"
2	15' X 8' X 18 INCHES	Class "B" Stone D_{50}=6"
3	35' X 18' X 30 INCHES	Class "2" Stone D_{50}=23"
4	9' X 6' X 18 INCHES	Class "B" Stone D_{50}=6"
5	20' X 8' X 24 INCHES	Class "1" Stone D_{50}=13"
6	12' X 6' X 18 INCHES	Class "B" Stone D_{50}=6"
7	15' X 8' X 18 INCHES	Class "B" Stone D_{50}=6"
REVISED CONSTRUCTION DRAWINGS		
8	15' X 8' X 18 INCHES	Class "B" Stone D_{50}=6"
9	6' X 5' X 12 INCHES	Class "A" Stone D_{50}=3"
10	12' X 6' X 18 INCHES	Class "B" Stone D_{50}=6"

DRAINAGE CALCULATIONS & DRAINAGE SCHEDULE

Project: Optimist Farm Road
Date: 11-12-00
Project # 136-00
Revisions: 3/8/02

Pipe sizing table from "Elements of Urban Stormwater Design", by H. Rooney Malcom, P.E. at North Carolina State University

Rational Method
Q=CIA
Q = Stormwater Runoff (cfs)
C = Runoff Coefficient
I = Rainfall Intensity (in.)
D.A = Drainage Area

Rainfall intensity (I) = g/(h+T)
T = Time of duration in minutes in the range 5 min. to 120 min.

	Storm Event	g	h	Intensity (I) for T=5min.
Q_2 = Two year storm runoff	2	132	18	5.7
Q_{10} = Ten year storm runoff	10	195	22	7.2
Q_{25} = Twenty five year storm runoff	25	233	23	8.3

PIPE NUMBER	D.A. (acre)	C	Composite C	Q_{10} (CFS)	Q25 (CFS)	UPPER INVERT	LOWER INVERT	UPPER RIM ELEV.	LENGTH (FT)	SLOPE (ft/ft)	Theoretical Pipe Dia.(in.)	Proposed Pipe Dia.(in.)
2	15.90	0.30	0.30		24.7	318.50	317.90	0.00	56	0.011	23.7	30
3	70.00	0.30	0.30		59.6	331.40	329.90	0.00	70	0.021	33.8	2-36"
5	19.90	0.30	0.30		29.1	338.10	336.90	0.00	84	0.014	23.9	30
6	6.90	0.30	0.30		11.2	357.00	354.70	0.00	64	0.036	14.1	24
7	17.00	0.30	0.30		42.3	329.00	328.56	0.00	44	0.010	29.4	2-18"
8	18.00	0.30	0.30		37.4	340.25	339.55	0.00	70	0.010	29.0	2-30"
9	0.10	0.30	0.30		0.2	355.00	354.56	0.00	44	0.010	4.3	15
10	11.00	0.30	0.30		27.4	349.50	347.90	0.00	80	0.020	22.0	30

ALL PIPES 24 INCHES AND GREATER MUST HAVE FLARED END SECTION ON THE UPSTREAM END

ALL DRAINAGE PIPE SHALL BE REINFORCED CONCRETE PIPE

TEMPORARY SEDIMENT TRAP (CUSTOM BASINS)

PROJECT: 309-01 DATE: 2/4/02

STRUCTURE	DRAINAGE AREA (AC)	DENUDED AREA (AC)	TRAP VOLUME REQUIRED(cu. ft.)	TRAP SIZE W'	L'	D'	WEIR LENGTH (FT)
17	4.8	0.2	8640	60	30	5'	12
18	4.8	0.3	8640	60	30	5'	12
19	0.2	0.2	360	12	6	5'	12
20	0.3	0.3	540	15	7	5'	12
21	4.8	0.4	8640	60	30	5'	12
22	0.4	0.4	720	17	9	5'	12
23	2.6	0.2	4680	43	22	5'	12
24	0.2	0.2	360	12	6	5'	12
TRAP VOLUME = 1800 cu. ft. Per Denuded Acre							

APPROVED
DRC: 4/15/02
BB: 4/22/02
TS 4-18-02

No.	Revisions to Plans	DATE
1	1st Construction Submittal	8-6-01
2	2nd Construction Submittal	9-19-01
3	3rd Construction Submittal	12-17-01
4		
5		
6		
7		
8		
9		
10		
11		

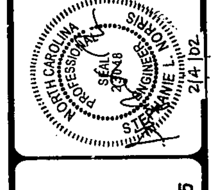

SPAULDING & NORRIS, PA
Design Consultants
972 Trinity Road
Raleigh, North Carolina 27607
Phone (919) 854-7990 Fax (919) 854-7925

PREPARED FOR:
Central Carolina Homes, LLC
2832 Brenfield Drive
Raleigh, NC 27606

DATE: Fri Dec 14, 2001

PROJECT ENGINEER
Stephanie Norris 919-854-7990
PROJECT CADD DESIGNER
Andrew B. Jacobs 919-854-7990
PROJECT SURVEYOR
Mike Goodfred 919-851-2344

Covington Meadows Subdivision a Cluster Community
Storm Drainage Tables

\\Wt_server\sys\301 - 350 Projects\309-01 Optimist Farm Subd. Cary H20 & SS\309-2002.pro

DRAWING SHEET
D-2.0

PROJECT NUMBER
309-2001