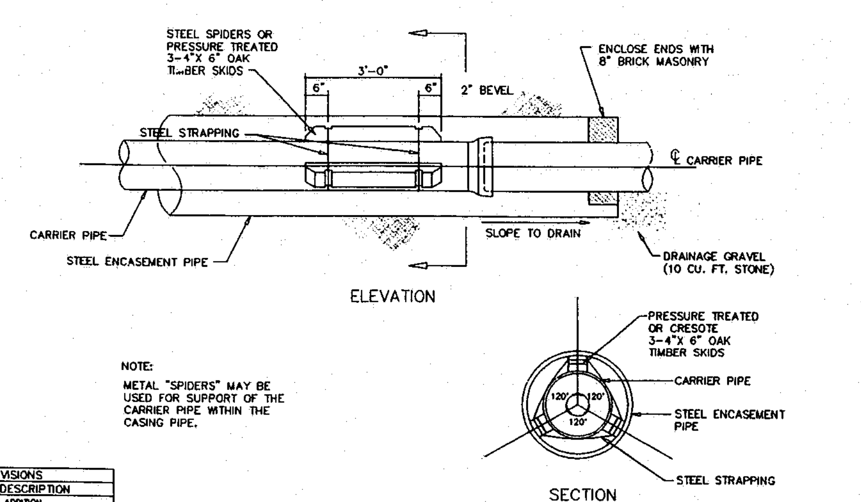

NOTE:
METAL "SPIDERS" MAY BE USED FOR SUPPORT OF THE CARRIER PIPE WITHIN THE CASING PIPE.

REVISIONS	
DATE	DESCRIPTION
11/88	NOTE ADDITION

CARRIER PIPE — STD. No. 5.02

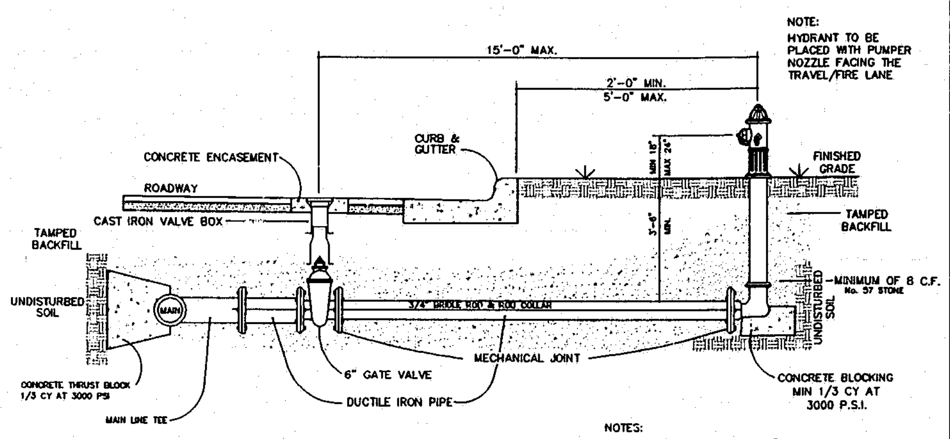

NOTE:
HYDRANT TO BE PLACED WITH PUMPER NOZZLE FACING THE TRAVEL/FIRE LANE

NOTES:
1. TOP OF BLOCKING TO BE 2" FROM HYDRANT WEEP HOLES.
2. HYDRANT TEE MAY BE SUBSTITUTED FOR D.I.P. NIPPLE AND RODDING.
3. TAPPING SADDLES MAY BE USED INSTEAD OF A TEE FOR WATER LINES LARGER THAN 16 INCHES.

REVISIONS	
DATE	DESCRIPTION
12/86	LABELED TEE D.O.U.
8/90	NOTE ADDITION

STANDARD HYDRANT INSTALLATION — STD. No. 6.06

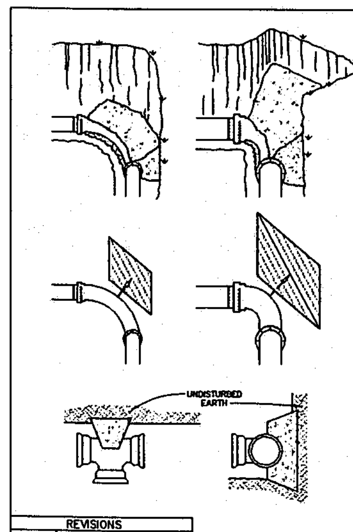

MINIMUM CONCRETE BLOCKING (C.Y.) *					
NOM. PIPE DIA. IN.	TEES & DEAD ENDS	90°D BEND	45°D BEND	22-1/2°D BEND	11-1/4°D BEND
4	1/3	1/3	1/3	1/3	1/3
6	1/3	1/3	1/3	1/3	1/3
8	1/3	1/2	1/3	1/3	1/3
10	2/3	3/4	1/2	1/3	1/3
12	3/4	1.0	2/3	1/3	1/3
14	1.0	1-1/2	3/4	1/2	1/3
16	1-1/3	2.0	1.0	1/2	1/3
18	1-2/3	2-1/3	1-1/3	2/3	1/3
20	2.0	3.0	1-2/3	3/4	1/2
24	3.0	4-1/3	2-1/3	1-1/3	2/3

* CONCRETE SHALL BE 3000 P.S.I. MIX.

NOTE:
NO CONCRETE SHALL COVER BOLTS OR GLANDS.

REVISIONS	
DATE	DESCRIPTION

STANDARD REACTION BLOCKING — STD. No. 6.12

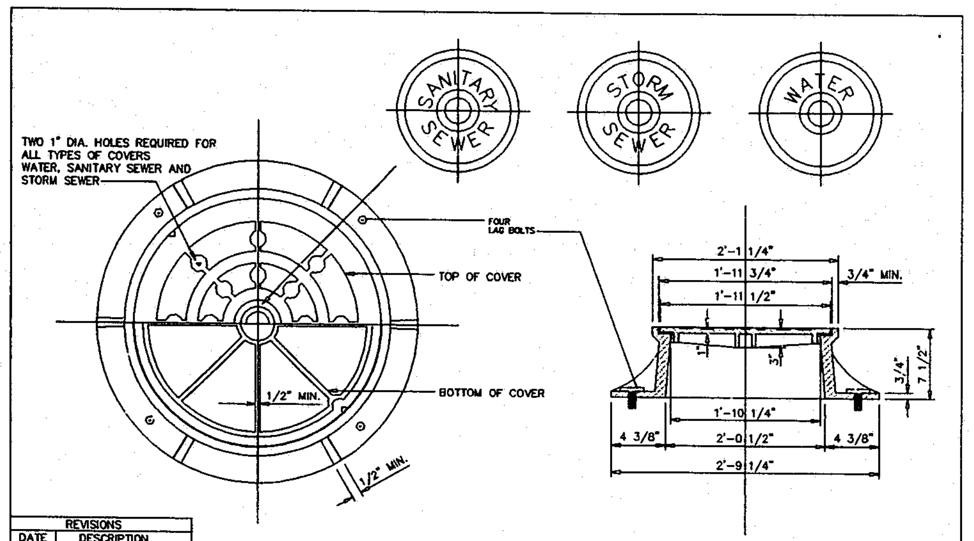

REVISIONS	
DATE	DESCRIPTION
2/87	ADDED LAG BOLTS D.O.U.

SHEET 1 OF 2

STANDARD MANHOLE RING AND COVER — STD. No. 7.06

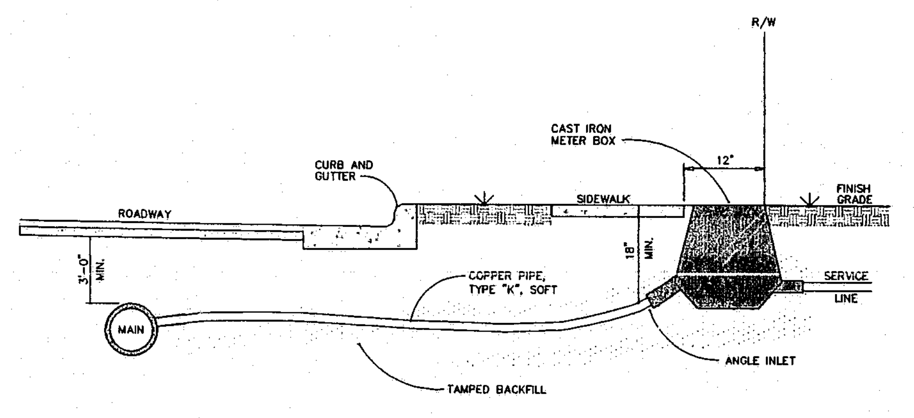

REVISIONS	
DATE	DESCRIPTION

STANDARD 3/4" AND 1" METER BOX INSTALLATION — STD. No. 6.01

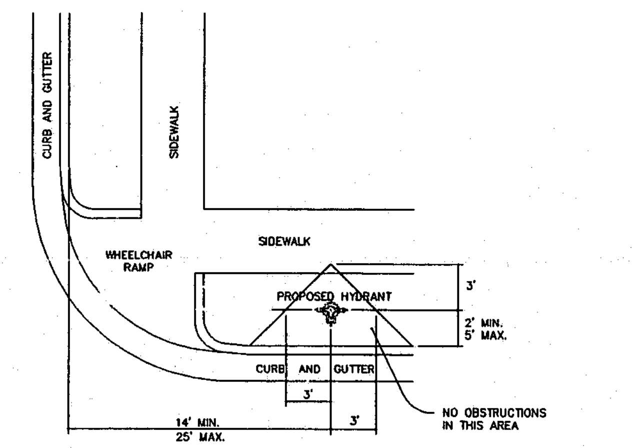

REVISIONS	
DATE	DESCRIPTION
11/3/88	OBSTRUCT. AREA D.O.U.

NOTE: LOCATION SHOULD BE COORDINATED WITH NCDOT ALONG STATE MAINTAINED ROADWAYS.

SHEET 1 OF 2

STANDARD HYDRANT LOCATION — STD. No. 6.07

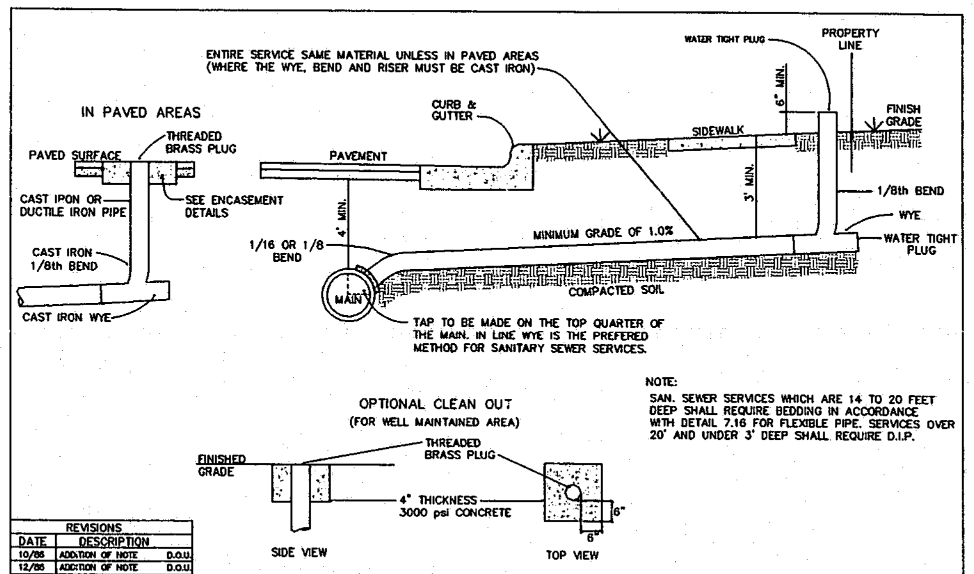

NOTE:
SAN. SEWER SERVICES WHICH ARE 14 TO 20 FEET DEEP SHALL REQUIRE BEDDING IN ACCORDANCE WITH DETAIL 7.16 FOR FLEXIBLE PIPE. SERVICES OVER 20' AND UNDER 3' DEEP SHALL REQUIRE D.I.P.

REVISIONS	
DATE	DESCRIPTION
10/86	ADDITION OF NOTE D.O.U.
12/86	ADDITION OF NOTE D.O.U.
11/88	MAIN DEPTH M.H.D.

STANDARD SANITARY SEWER TAP AND SERVICE — STD. No. 7.01

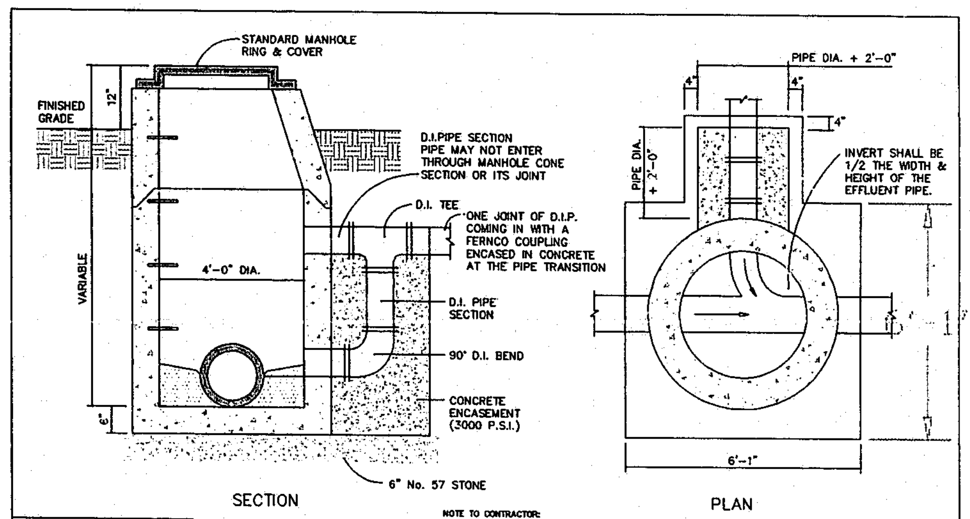

NOTE TO CONTRACTOR:
1. TO BE CONSTRUCTED FOR ALL DROPS OVER 30".
2. P.V.C. OR A.B.S. FITTINGS MAY BE USED FOR THE DROP IF THE MAIN LINE IS A.B.S. OR P.V.C.
3. APPROVED PRECAST DROP MANHOLES MAY BE USED.

REVISIONS	
DATE	DESCRIPTION
11/88	SECT. VIEW/TEE BEND M.H.D.
2/90	REVISE TEE & BEND

STANDARD OUTSIDE DROP MANHOLE — STD. No. 7.08

MAIN SIZE	END PIPE SIZE
4" - 12"	SAME DIAMETER AS MAIN
16"	12"
24" & GREATER	APPROVED BY TOWN ENGINEER

NOTE: WHEN THE BLOW-OFF IS EXPOSED TO TRAFFIC, THE DETAIL FOR A PAVED AREA SHALL BE USED EVEN IF THE BLOW-OFF IS OUTSIDE THE PAVEMENT.

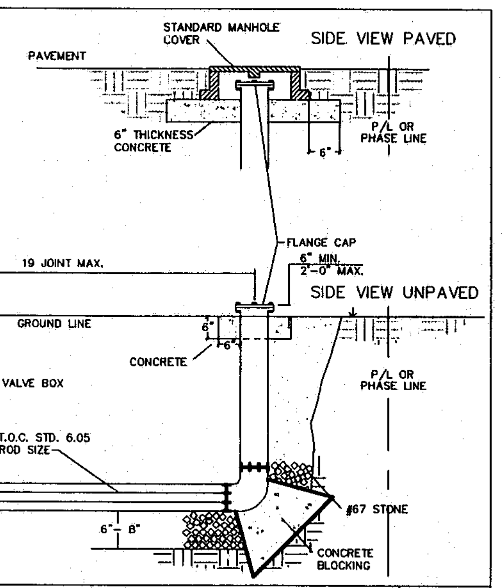

REVISIONS	
DATE	DESCRIPTION

STANDARD BLOW-OFF ASSEMBLY — STD. No. 6.04

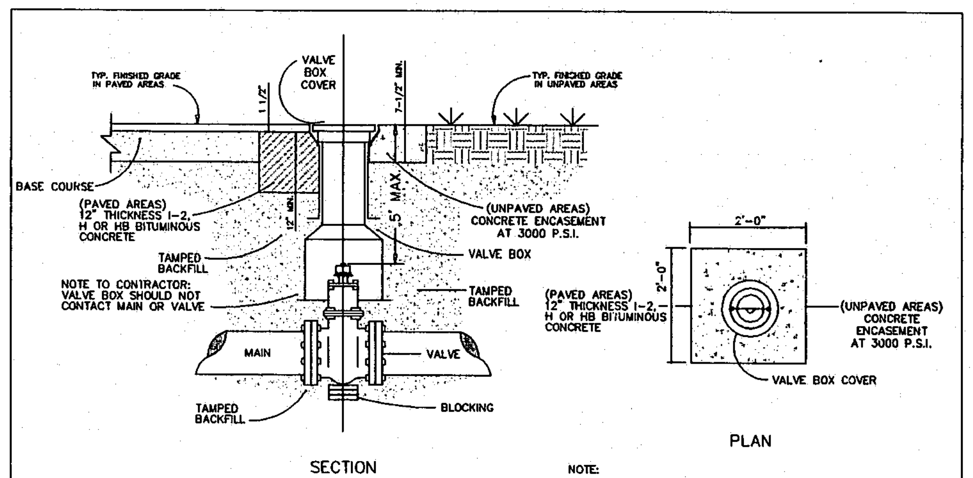

NOTE:
1. D.I.P. MAY BE USED FOR VALVE BOX EXTENSIONS.
2. VALVE OPERATING NUT MUST BE EXTENDED SO THAT THE DEPTH IS NO GREATER THAN 5' FROM THE SURFACE USING A MANUFACTURER APPROVED EXTENSION KIT.
3. PRECAST CONCRETE ENCASEMENT IS ALLOWED OUTSIDE OF PAVED AREAS.

REVISIONS	
DATE	DESCRIPTION
11/88	NOTE ADDITION S.S.S.
11/88	NOTE ADDITION M.H.D.

STANDARD VALVE BOX INSTALLATION — STD. No. 6.08

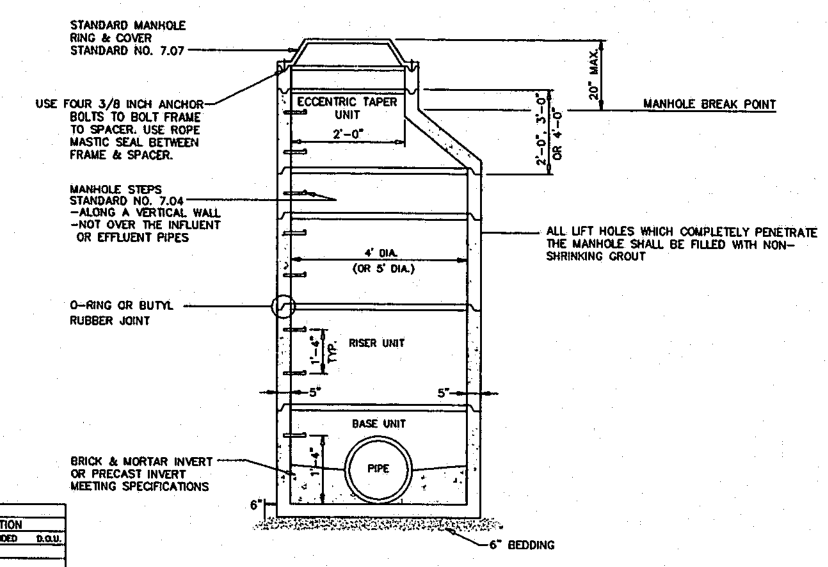

REVISIONS	
DATE	DESCRIPTION
1/8/87	MASTIC SEAL ADDED D.O.U.

STANDARD PRECAST CONCRETE MANHOLE — STD. No. 7.03

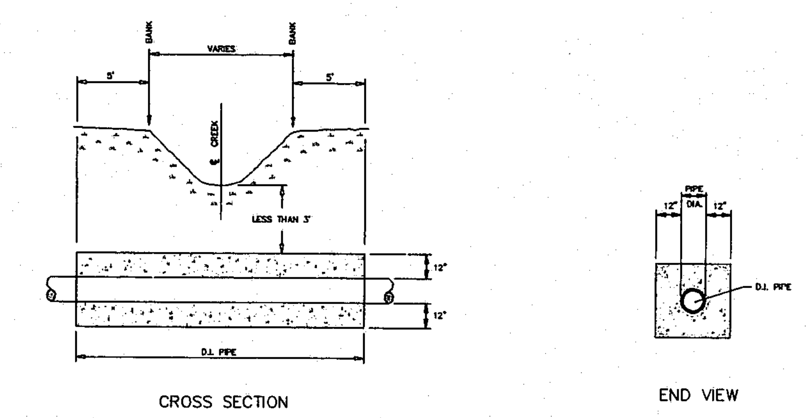

NOTE:
CONCRETE SHALL BE 3,000 P.S.I.
CONCRETE ENCASEMENT NOT REQUIRED WHEN PIPE IS AT LEAST THREE (3) FEET UNDER ℄ OF CREEK BOTTOM.

REVISIONS	
DATE	DESCRIPTION
11/88	CHANGED NOTE SSS
11/88	DIMENSION CREEK DEPTH MHD

STANDARD CONCRETE ENCASEMENT FOR STREAM CROSSING — STD. No. 7.13

1

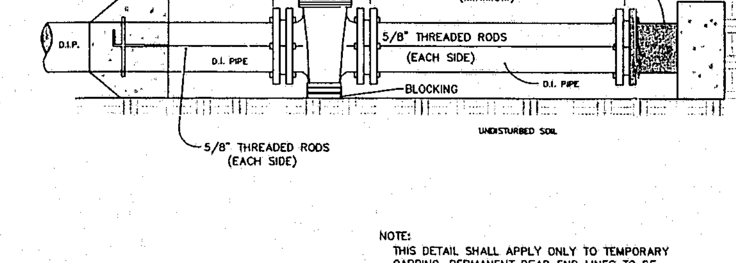

NOTE:
THIS DETAIL SHALL APPLY ONLY TO TEMPORARY CAPPING. PERMANENT DEAD END LINES TO BE IN ACCORDANCE WITH STANDARD DETAIL NO. 6.04.

REVISIONS	
DATE	DESCRIPTION
11/86	D.I.P. ADDED S.S.S.

STANDARD CAPPING DETAIL — STD. No. 6.09

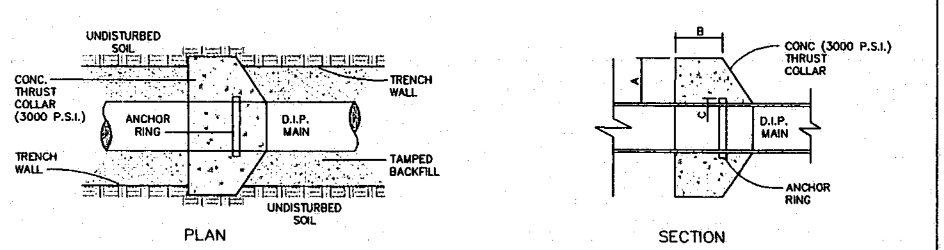

SCHEDULE				
PIPE DIAMETER	CONCRETE THRUST COLLAR		ANCHOR RING	RINGS REQUIRED
	A	B	C	
6",8",12"	1'-0"	1'-0"	2"	ONE
16"	1'-4"	1'-0"	2"	ONE
20 "	1'-4"	1'-0"	3"	ONE
24"	1'-4"	1'-0"	3"	TWO
30"	1'-4"	1'-2"	4"	TWO
36"	1'-4"	1'-4"	4"	TWO

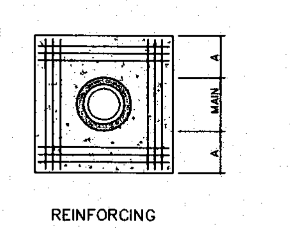

REINFORCING

NOTE:
6" TO 16" MAINS = 12-NO. 7 BARS
20" TO 36" MAINS = 12-NO. 8 BARS
BARS PLACED AS SHOWN

REVISIONS	
DATE	DESCRIPTION
11/86	D.I.P. ADDED S.S.S.

STANDARD THRUST COLLAR INSTALLATION — STD. No. 6.10

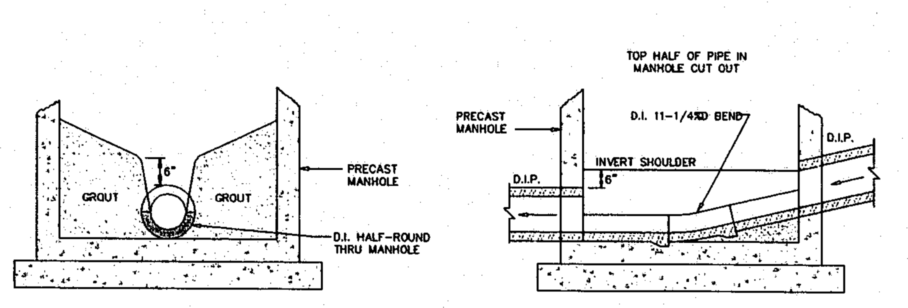

NOTES:
NO HORIZONTAL ALIGNMENT CHANGE CAN BE MADE WITHIN THIS MANHOLE TYPE. USE ON GRADES OF 10% OR GREATER.

EACH JOINT OF PIPE BETWEEN HIGH VELOCITY MANHOLE & MANHOLE UPGRADE SHALL HAVE A THRUST COLLAR. SEE DETAIL NO. 6.10

REVISIONS	
DATE	DESCRIPTION

STANDARD HIGH VELOCITY MANHOLE INVERT — STD. No. 7.05

1. ADD DETAIL 6.09

NOTE:
CLOUDED AREA DENOTES REVISIONS

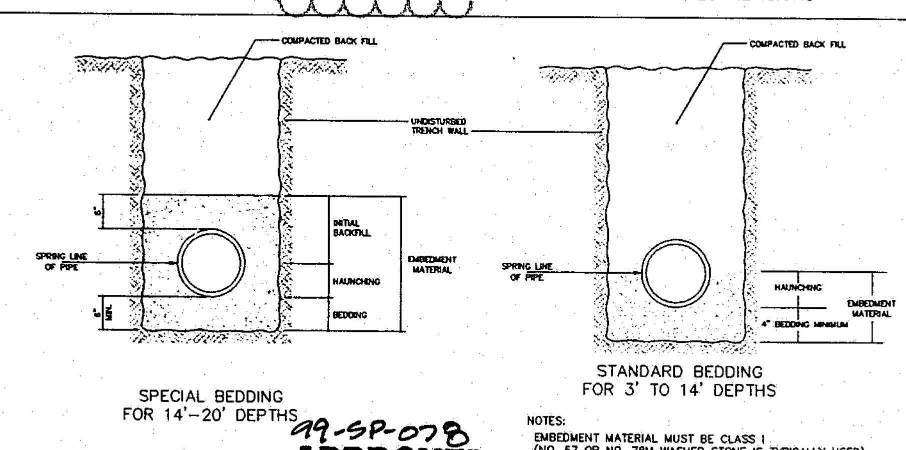

SPECIAL BEDDING FOR 14'-20' DEPTHS

STANDARD BEDDING FOR 3' TO 14' DEPTHS

99-SP-078
APPROVED
BB 7/1/99
TM 7/2/99

NOTES:
EMBEDMENT MATERIAL MUST BE CLASS I (NO. 67 OR NO. 78M WASHED STONE IS TYPICALLY USED)

EMBEDMENT MATERIAL SHALL BE COMPACTED TO A MINIMUM OF 90% STANDARD PROCTOR DENSITY FOR CLASS I MATERIAL.

REFERENCE SECTION 7.01C FOR EMBEDMENT MATERIAL SPECIFICATIONS.

ALL SANITARY SEWER LINES OVER 20 FEET IN DEPTH MUST BE D.I.P.

REVISIONS	
DATE	DESCRIPTION

BEDDING FOR FLEXIBLE & SEMI-RIGID SANITARY SEWER PIPE — STD. No. 7.16

ENGINEERING & SURVEYING

111 MacKenan Drive
Cary, N.C. 27511

PHONE : 919-469-3340
FAX : 919-467-6008

SEALS

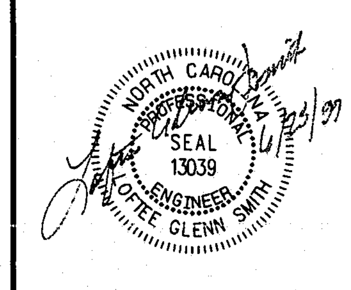

DRAWING TITLE

UTILITY DETAILS

PROJECT TITLE 98043

CENTREGREEN PARK AT WESTON

(FORMERLY WESTON COMMONS TRACT 6A)

REVISIONS		
NUMBER	DESCIPTION	DATE
1	PER T.O.C FIRST REVIEW	5/26/98
2	PER T.O.C SECOND REVIEW	6/23/98
3	PER T.O.C THIRD REVIEW	7/27/98
4	ADDENDUM #1 REVISIONS	8/14/98
5	NRB OPTIONS	8/28/98
6	REVISED DETAILS,NOTES	12/30/98
7	ADDENDUM #3 REVISIONS	4/1/99
8	RESUBMIT TO TOWN OF CARY	4/12/99
9	PER T.O.C. FIRST RE-REVIEW	5/10/99

DRAWN BY	DW
CHECKED BY	LGS
DATE ISSUED	4/27/1998
SCALE	AS NOTED

SHEET NO. 7

OF

K:\CADD\PX-98\98043\details.prc Mon May 3, 1999 11:15:27AM WITHERS & RAVENEL ENGINEERING & SURVEYING