Layout Tab Name: C401 SANITARY PLAN AND PROFILE, Images: MAP.png; Morrisville aerial.jpg; Morrisville aerial (2).jpg; Morrisville aerial new.jpg; , Xrefs: 075356-X.dwg; 075356-P.dwg; 075356-TBLK.dwg; 075356-X-DIGITIZED.dwg; Buildings.dwg
Last Saved By:ladzinski, 12/12/2017 9:55:39 AM
G:\DE\Clients\WaterWalk\075356 Morrisville, NC\4.0 Disciplines\Civil\Cadd\Cd\075356-C401-SAN-PRO.dwg Plotted By:Ladzinski, Jake Plotted:January 17, 2018, 2:50:08 PM

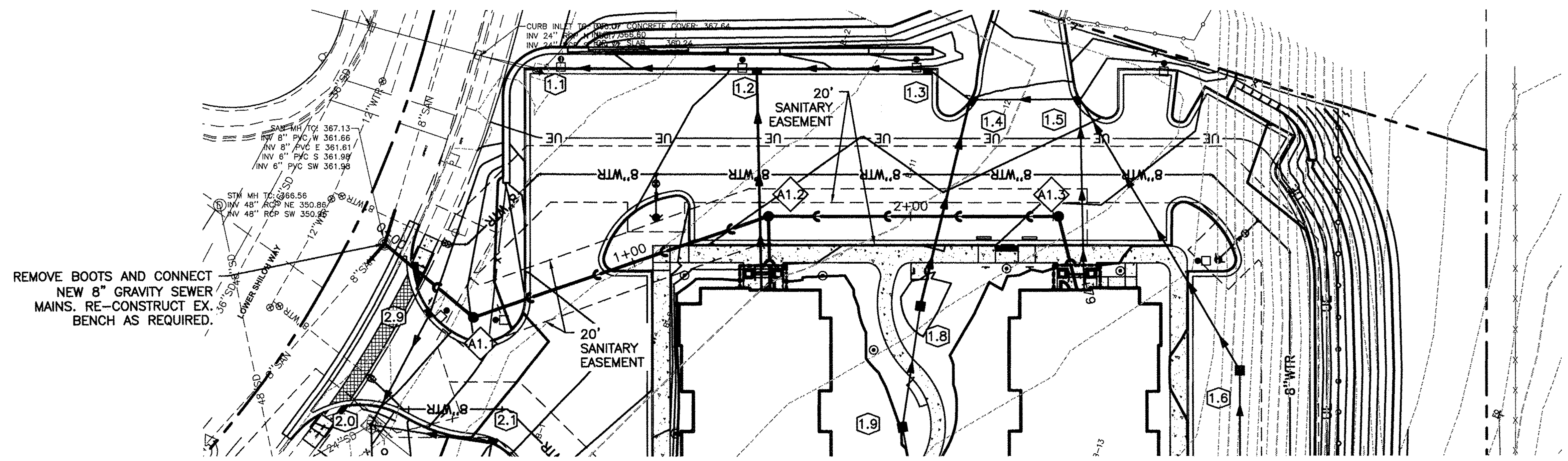

SANITARY SEWER - PLAN VIEW

N

0 30 60 90
GRAPHIC SCALE IN FEET

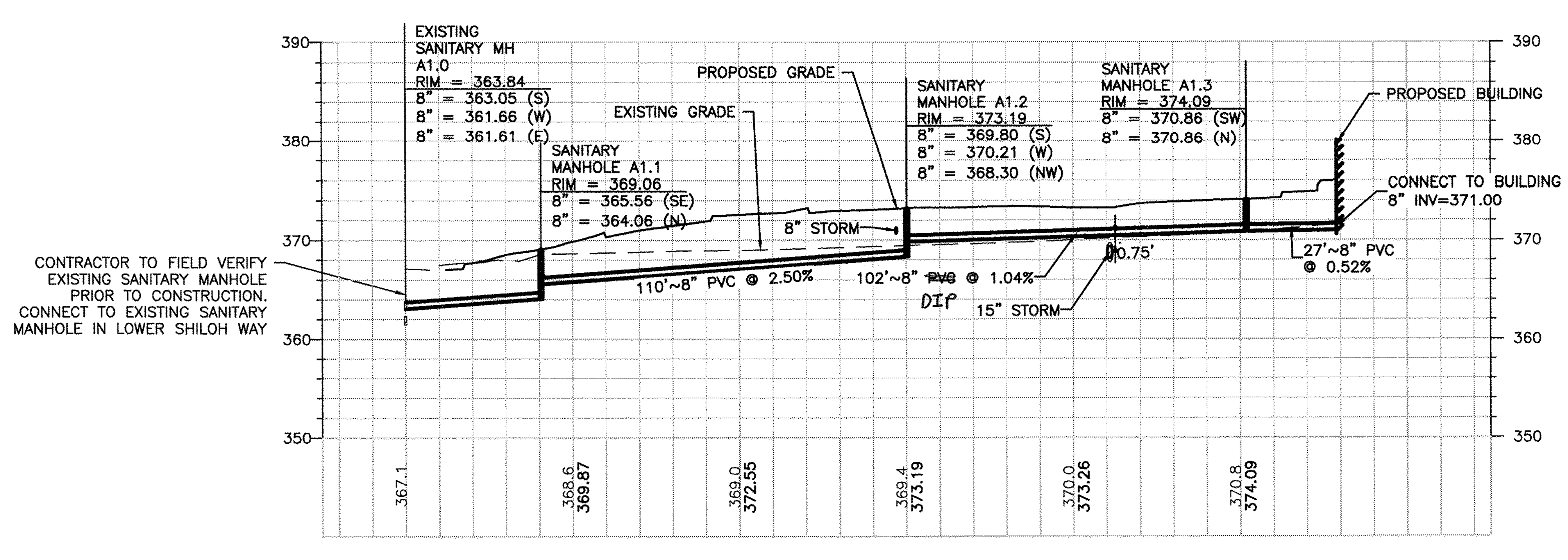

PROFILE VIEW - A1.0 TO BLDG #2

0 30 60 90
GRAPHIC SCALES IN FEET
10 20 30

BENCHMARK:

THE BASIS OF ELEVATIONS HEREON IS NAVD 88.
IRON ROD SET – SEE THE VICINITY MAP FOR LOCATION

ELEVATION = 370.68' (371.51' NGVD29)

North Carolina 811
www.nc811.org

MORRISVILLE PROJECT # : 17-11000001 FILE # : 17-0001-S/C

Town of Morrisville
APPROVED FOR CONSTRUCTION

Signature: [signature] Date: 5/31/18
Town of Morrisville, Town Engineer

Date/Initials
Engineering: 5/31/18 RLP
Planning: MYS 2/6/18
Other (specify): 5/31/18 JBB (SW)

Signature: [signature] Date: 5/23/18
Town of Cary Utilities, Water and Sewer

Engineering Inspection Services must be contacted (919) 463-6907 at a minimum 24 hours prior to the commencement of any construction activities.

NORTH CAROLINA PROFESSIONAL SEAL 032464 ENGINEER GREGORY D. HARNISH 18 JAN 2018

SEAL

No.	DATE	REVISION
	01/18/18	REVISED FOR FINAL APPROVAL

PROJECT No: 075356
DATE 01/24/17
DES. JL
DR. DH
CKD. JG

WOOLPERT
ARCHITECTURE | ENGINEERING | GEOSPATIAL
11301 Carmel Commons Blvd.
Suite 300
Charlotte, NC 28226
704.525.6284
FAX: 704.525.8529

SITE IMPROVEMENT PLANS WATERWALK MORRISVILLE

1012 & 1016 LOWER SHILOH WAY
MORRISVILLE, NORTH CAROLINA

SANITARY PLAN AND PROFILE

SHEET NO.
C401